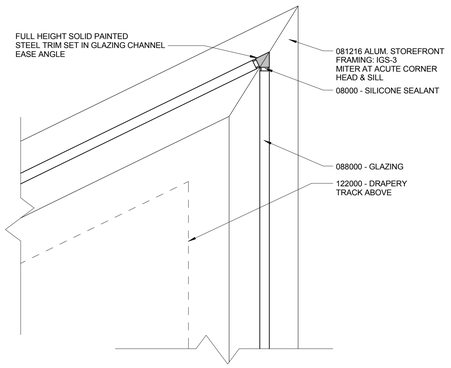

18 CONFERENCE ROOM - MITERED CORNER
3" = 1'-0"

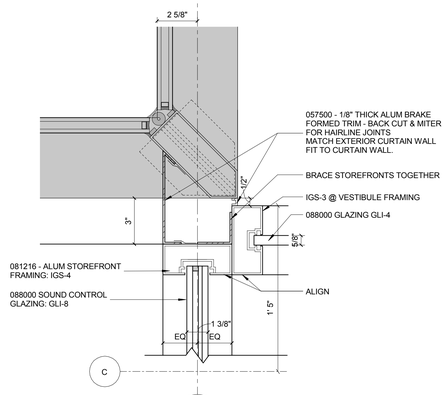

1.9

13 PLAN DETAIL - L02 @ EXTERIOR
3" = 1'-0"

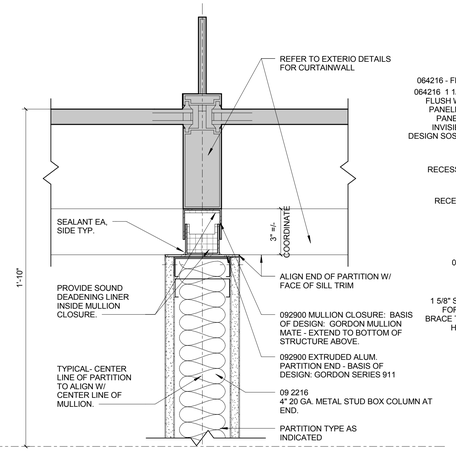

9 PLAN DETAIL AT EXTERIOR CURTAINWALL
3" = 1'-0"

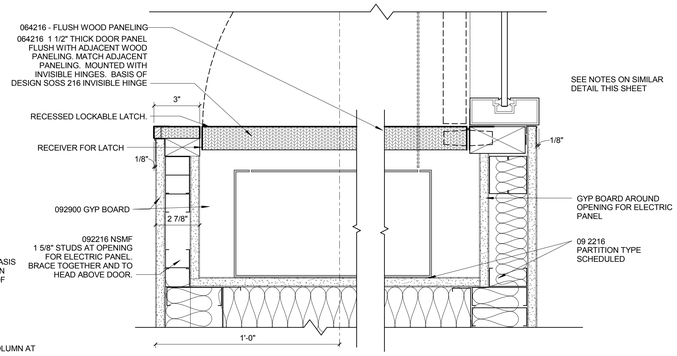

4 PLAN DETAIL AT WOOD JAMB-ELECTRIC PANEL
3" = 1'-0"

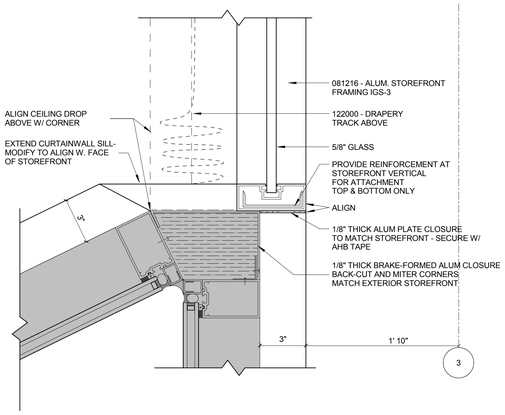

17 EXTERIOR CORNER AT CONFERENCE ROOM
3" = 1'-0"

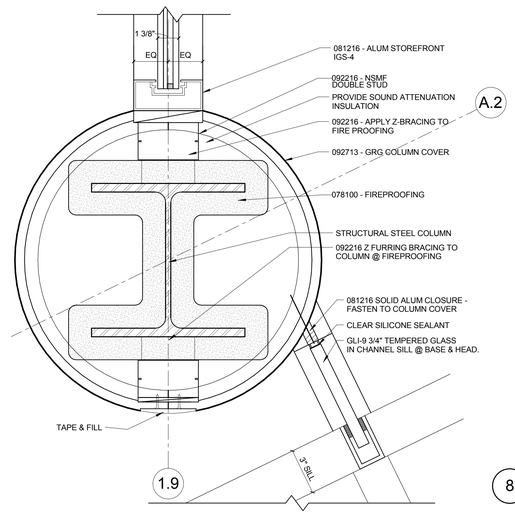

12 COLUMN AT ENTRY
3" = 1'-0"

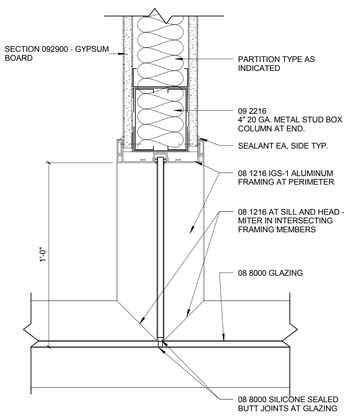

8 PLAN DETAIL AT GLAZING INTERSECTION
3" = 1'-0"

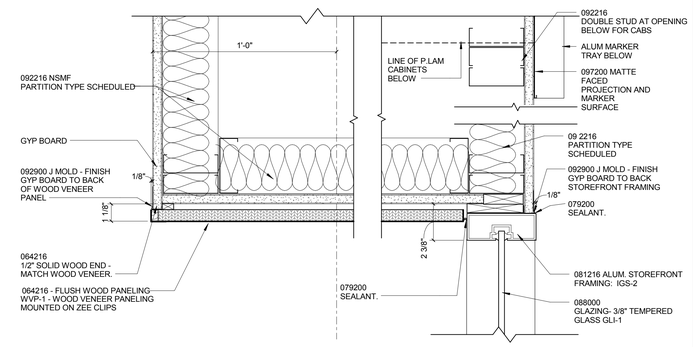

3 PLAN DETAIL AT WOOD JAMB
3" = 1'-0"

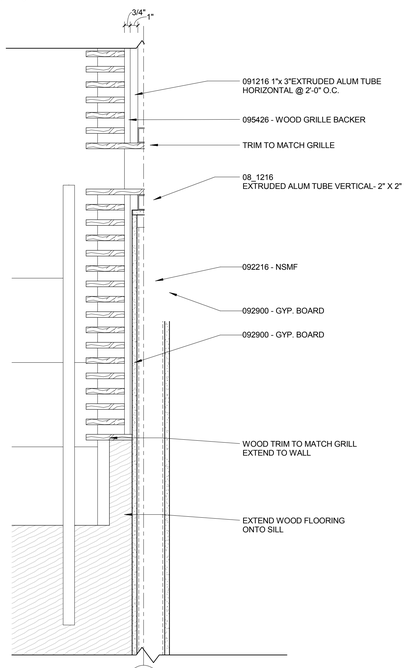

16 WOOD GRILLE AT STAGE STAIR
1 1/2" = 1'-0"

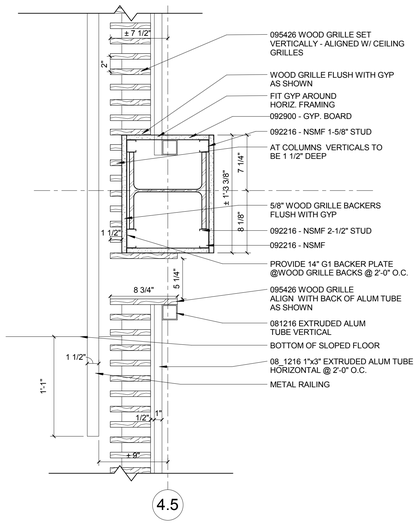

11 PLAN DETAIL - WOOD GRILLE AT COLUMN
1 1/2" = 1'-0"

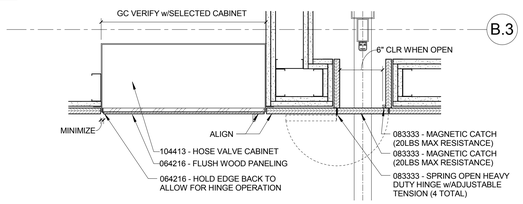

7 PLAN DETAIL - SIDE COILING POCKET/HOSE VALVE CAB
1 1/2" = 1'-0"

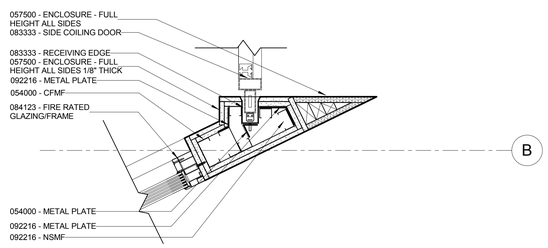

6 PLAN DETAIL - RATED GLAZING/SIDE COILING INTERSECTION
1 1/2" = 1'-0"

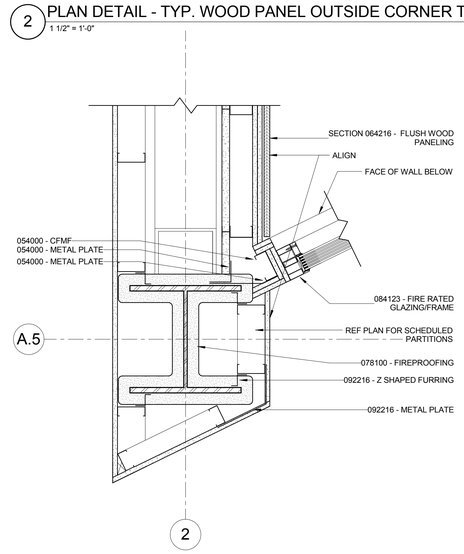

2 PLAN DETAIL - TYP. WOOD PANEL OUTSIDE CORNER TO GWB
1 1/2" = 1'-0"

1 PLAN DETAIL - RATED GLAZING @ COLUMN
1 1/2" = 1'-0"

Webster UNIVERSITY

Webster University
Interdisciplinary Science Building

CANNONDESIGN

1100 Clark Avenue
St. Louis, Missouri 63102
T: 314.241.6250
F: 314.241.2570

William Tao & Associates, Inc
MEP/FP Engineer
7955 Manchester Road, Suite 125
St. Louis, MO 63143
314-884-7600

David Mason & Associates, Inc
Structural & Civil Engineer
800 South Vandeventer Avenue
St. Louis, MO 63110
314.534.1053

Faith Group
Technology
3101 S. Hanley Rd, Suite 100
St. Louis, MO 63143
314.991.2228

Kuhlmann Leavitt, Inc.
Environmental Graphics & Signage
7400 Pershing Ave
St. Louis, MO 63130
314.725.6616

KWA Architects
Architecture
9721 Litzinger Road
St. Louis, MO 63124
314.962.2560

Spellman Brady & Company
Interior Designer
8251 Maryland Avenue, Suite 300
St. Louis, MO 63105
314.862.0070

SWT Design
Landscape Architect
7722 Big Bend Blvd
St. Louis, MO 63119
314.644.5700

Webb Engineering Services, Inc.
Plumbing & Fire Protection
1400 S. 3rd Street, Suite 201
St. Louis, MO 63104
314.588.0600

No.	Description	Date
-	ISSUED FOR CONSTRUCTION (BP3)	15 MAR 2016

Drawing Title:

INTERIOR PLAN DETAILS

Project No.: 04561.01 Checked by:

A0810

© Cannon Design 2015
All rights reserved. No part of this document may be reproduced or used in any form without prior written authorization by The Cannon Corporation.
3/30/2016 11:57:44 PM

© Cannon Design 2015